1. GENERAL

1.1 USE BAR SCALE TO CONFIRM ACTUAL PLOT SCALE. EXISTING AND NEW ELEVATIONS AND INVERTS SHOWN ARE GEODETIC AND ARE IN METERS. ALL PIPE DIMENSIONS ARE IN MILLIMETERS UNLESS OTHERWISE NOTED.
1.2 UNLESS OTHERWISE STATED "ENGINEER" REFERS TO D. B. GRAY ENGINEERING INC.
1.3 EXISTING ELEVATIONS AND LOCATIONS, INVERTS AND SIZES OF EXISTING SERVICES & UTILITIES ARE NOT NECESSARILY SHOWN ON PLAN AND THOSE SHOWN ARE DERIVED FROM AVAILABLE INFORMATION AND MUST BE CONFIRMED ON SITE BEFORE COMMENCING CONSTRUCTION. REPORT ANY DIFFERENCES TO ENGINEER. UNDERGROUND LOCATES (INCLUDING ONTARIO ONE CALL: 1–800–400–2255) SHALL BE CONDUCTED PRIOR TO THE COMMENCEMENT OF ANY EXCAVATION.
1.4 SITE BOUNDARIES AND EXISTING GRADES AND OTHER FEATURES DERIVED FROM TOPOGRAPHIC SURVEY PREPARED BY FAIRHALL MOFFATT & WOODLAND LIMITED JOB No. Z13100.
1.5 REFER TO ARCHITECTURAL AND LANDSCAPE SITE PLANS FOR EXACT LOCATIONS OF BUILDINGS, PAVED AREAS, SIDEWALKS, PLANTERS ETC.
1.6 REFERENCE THE LATEST REVISION AND ALL ADDENDUMS OF THE GEOTECHNICAL INVESTIGATION BY PATERSON REPORT No. PG4903–1. SITE PREPARATION INCLUDING BUILDING SUB–GRADE PREPARATION AND PAVEMENT SUB–GRADE PREPARATION AND CONSTRUCTION OF THE PAVEMENT STRUCTURE AND EXCAVATION AND BACKFILLING, INCLUDING COMPACTION OF MATERIALS, SHALL CONFORM TO THE GEOTECHNICAL INVESTIGATION TO THE SATISFACTION OF THE GEOTECHNICAL ENGINEER.
1.7 DRAWINGS ARE TO BE READ IN CONJUNCTION WITH SERVICING BRIEF & STORM WATER MANAGEMENT REPORT No. 19035 PREPARED BY D. B. GRAY ENGINEERING INC.
1.8 REINSTATE ADJACENT PROPERTIES TO PRE–CONSTRUCTION CONDITIONS.
1.9 REINSTATE CITY PROPERTIES TO CITY STANDARDS AND TO CITY OF OTTAWA'S SATISFACTION.
1.10 ALL RELEVANT WORK SHALL BE DONE IN ACCORDANCE WITH CURRENT CITY STANDARDS AND SPECIFICATIONS.
1.11 ONTARIO PROVINCIAL STANDARDS & SPECIFICATIONS WILL APPLY WHERE NO CITY STANDARDS ARE AVAILABLE.

2. EROSION AND SEDIMENT CONTROL PLAN

2.1 THE EROSION AND SEDIMENT CONTROL PLAN IS A "LIVING DOCUMENT" AND SHALL BE REVISED IN THE EVENT THE SPECIFIED CONTROL MEASURES ARE NOT SUFFICIENT. THE CONTRACTOR SHALL IMPLEMENT BEST MANAGEMENT PRACTICES TO PROVIDE PROTECTION OF THE AREA DRAINAGE SYSTEM AND THE RECEIVING WATER COURSE DURING CONSTRUCTION ACTIVITIES. THIS INCLUDES LIMITING THE AMOUNT OF EXPOSED SOIL, USING SEDIMENT CAPTURE FILTER SOCK INSERTS IN CATCH BASINS AND MANHOLES AND INSTALLING SILT FENCES AND OTHER EFFECTIVE SEDIMENT TRAPS. THE CONTRACTOR ACKNOWLEDGES THAT FAILURE TO IMPLEMENT APPROPRIATE EROSION AND SEDIMENT CONTROL MEASURES MAY BE SUBJECT TO PENALTIES IMPOSED BY –NY APPLICABLE REGULATORY AGENCY. SPECIFICALLY THE CONTRACTOR SHALL INSTALL THE FOLLOWING CONTROL MEASURES AND INSPECT, MAINTAIN AND REMOVE THE CONTROL MEASURES.
2.2 PRIOR TO COMMENCEMENT OF CONSTRUCTION AT ALL MUNICIPAL CATCH BASINS ADJACENT TO THE SITE, ALL ON–SITE CATCH BASINS AND AT ANY MANHOLES OR CATCH BASINS THAT WILL RECEIVE DISCHARGE FROM DE–WATERING OPERATIONS AND ALL NEW CATCH BASINS AS THEY ARE INSTALLED: INSTALL SEDIMENT CAPTURE FILTER SOCK INSERTS (TERRAFIX GEOSYNTHETICS INC SILTSACK OR APPROVED EQUAL). INSPECT AT THE END OF EACH DAY AND AFTER EACH RAINFALL. REMOVE SEDIMENT AS RECOMMENDED BY THE MANUFACTURER. IMMEDIATELY REPAIR OR REPLACE ANY DAMAGED FILTER SOCK INSERTS. DO NOT REMOVE UNTIL CONSTRUCTION IS COMPLETE.
2.3 ANY MATERIAL DEPOSITED ON PUBLIC ROAD SHALL BE REMOVED BY SWEEPING AND SHOVELING OR VACUUMING AND DISPOSING SEDIMENT IN A CONTROLLED AREA. DO NOT SWEEP OR HOSE MATERIAL INTO ANY STORMWATER CONVEYANCE SYSTEM.
2.4 CONSTRUCTION IS CONSIDERED COMPLETE WHEN THE FOLLOWING CONDITIONS HAVE BEEN MET:
a. ALL STRUCTURES HAVE BEEN BUILT.
b. ALL HARD SURFACES HAVE BEEN CONSTRUCTED.
c. ALL PROPOSED GRASSED AREAS ARE EITHER SODDED OR HAVE A FULL COVERAGE OF WELL ESTABLISHED TURF AND HAVE HAD A MINIMUM OF ONE FULL GROWING SEASON (MAY 15TH TO SEPTEMBER 15TH).
d. THERE ARE NO AREAS OF EXPOSED EARTH.
e. ALL STOCKPILED MATERIALS HAVE BEEN REMOVED.
2.5 REMOVE EROSION AND SEDIMENT CONTROL MEASURES WHEN CONSTRUCTION IS COMPLETE.

3. GRADING & DRAINAGE

3.1 NEW GRADES TO MATCH EXISTING AT PROPERTY LINE. NO EXCESS DRAINAGE WILL BE DIRECTED TOWARDS THE ADJACENT PROPERTIES DURING AND AFTER CONSTRUCTION. THERE WILL BE NO ALTERATION TO EXISTING GRADE AND DRAINAGE PATTERNS ON PROPERTY LINE.
3.2 ALL AREAS SHALL BE GRADED TO ENSURE ADEQUATE DRAINAGE AWAY FROM BUILDINGS TO CATCH BASINS, SWALES, DITCHES AND OTHER APPROVED DISPOSAL AREAS. GRADING SHALL BE GRADUAL BETWEEN FINISHED SPOT ELEVATIONS SHOWN ON DRAWINGS TO PREVENT PONDING (OTHER THAN PONDING REQUIRED FOR STORMWATER MANAGEMENT).

4. SITE SERVICES

4.1 ALL SEWER MATERIALS AND CONSTRUCTION METHODS TO CITY OF OTTAWA STANDARDS AND ONTARIO PROVINCIAL STANDARDS SPECIFICATIONS (OPSS & OPSD). SEWER MATERIAL SHALL BE PVC SDR–35 (SDR–28 FOR DIAMETERS 150mm OR LESS) AND SHALL CONFORM TO CSA B182.2 AND SHALL HAVE BELL AND SPIGOT JOINTS WITH RUBBER GASKETS.
4.2 PROVIDE A MINIMUM 1.8 m COVER OVER SEWERS. WHERE THE MINIMUM COVER IS NOT POSSIBLE INSULATE AS INDICATED AND AS PER DETAIL.
4.3 MANHOLES & CATCH BASINS:
A. PRECAST MANHOLE UNITS: TO OPSS 1351 AND OPSD 701.010 WITH BASE SLAB OR MONOLITHIC BASE. TOP SECTIONS ECCENTRIC CONE OR FLAT LAB TOP TYPE WITH OPENING OFFSET FOR VERTICAL LADDER INSTALLATION.
B. MANHOLE STEPS: TO OPSD 405.01
C. ADJUSTING RINGS: TO ASTM C 478M.
ALUMINUM SURFACES IN CONTACT WITH OR CAST INTO CONCRETE SHALL HAVE POLYETHYLENE ANCHOR INSULATING SLEEVES.
D. PRECAST CATCH BASIN SECTIONS: TO OPSS 1351.
E. JOINTS: SHALL BE MADE WATERTIGHT USING BUTYL BASED, FLEXIBLE WATERSTOP/JOINT SEALANT MATERIAL.
F. SANITARY SEWERS: BENCH TO PROVIDE A SMOOTH U–SHAPED CHANNEL PER OPSD 701.021. SLOPE INVERT TO ESTABLISH SEWER GRADE.
G. STORM SEWERS: MANHOLES SHALL HAVE A 300mm SUMP AND CATCH BASINS AND DITCH INLETS SHALL HAVE A 600mm SUMP.
H. FRAMES, GRATES AND COVERS TO CITY OF OTTAWA DRAWINGS OR OPSD 401.010
GRATES AND COVERS TO BEAR EVENLY ON FRAMES. PAINTED WITH ONE SHOP COAT OF ASPHALT OR TAR BASE BLACK, ALL JOINTS AND CREVICES SHALL BE THOROUGHLY COATED.
I. GRATINGS (FOR DITCH INLETS): FABRICATED LATTICE OF WELDED QUALITY MILD CARBON STEEL BARS CONFORMING TO OPSS 1850 AND ASTM A569, GRADE 1015, HOT DIPPED GALVANIZED CONFORMING TO CSA G164–M.
J. GRANULAR BEDDING AND BACKFILL: OPSS GRANULAR A. RE–CYLCLED GRANULAR MATERIALS ARE NOT PERMITTED.
4.4 PROVIDE MINIMUM 3m LONG, 150mm DIAMETER, PERFORATED SUB–DRAINS C/W FILTER FABRIC SOCK & END PLUG AT ALL CATCH BASINS AND CATCH BASIN MANHOLES AS PER GEOTECHNICAL REPORT AND AS INDICATED ON PLANS.
4.5 ROOF DRAINS SHALL BE FLOW CONTROL TYPE EACH INSTALLED WITH A WEIR WITH A PARABOLIC SLOT, EACH SLOT SHALL RELEASE 5 USgpm/inch: WATTS ROOF DRAIN WITH WATTS ACCUTROL WEIR RD–100–A1 OR EQUAL. ROOF DRAINS SHALL BE INSTALLED AT THE LOW POINTS OF THE ROOF WHICH SHALL BE 145mm LOWER THAN THE PERIMETER OF THE ROOF. SCUPPERS SHALL BE INSTALLED SO THAT THE MAXIMUM DEPTH OF WATER ON THE ROOF CANNOT EXCEED 145mm. EACH OF FOUR SCUPPERS SHALL BE A MINIMUM 350mm WIDTH. REFER TO ARCHITECTS PLAN FOR EXACT LOCATIONS AND DETAILS.
4.6 THE INLET CONTROL DEVICE (LOCATED IN THE OUTLET PIPE OF CATCH BASIN MANHOLE CB/MH–4) SHALL BE A HYDROVEX VHV–1 VERTICAL VORTEX FLOW REGULATOR AND AND SIZED BY THE MANUFACTURER FOR A DISCHARGE RATE AS INDICATED ON PLAN. PRIOR TO INSTALLATION SUBMIT SHOP DRAWING TO ENGINEER FOR APPROVAL.

5. CONSTRUCTION:

5.1 PRIOR TO COMMENCING WORK:
A. OBTAIN AND PAY FOR ALL NECESSARY PERMITS AND APPROVALS FROM THE AUTHORITIES.
B. SIZE, DEPTH AND LOCATION OF EXISTING SERVICES, UTILITIES AND STRUCTURES AS INDICATED ON THE DRAWINGS ARE FOR GUIDANCE ONLY. ALL EXISTING SERVICES, UTILITIES AND STRUCTURES ARE NOT NECESSARILY SHOWN ON THE DRAWINGS. COMPLETENESS AND ACCURACY ARE NOT GUARANTEED. NOTIFY ALL APPLICABLE OWNERS, UTILITY COMPANIES AND AUTHORITIES HAVING JURISDICTION OF PROPOSED WORK AND LOCATE AND CLEARLY IDENTIFY ALL EXISTING SERVICES, UTILITIES AND STRUCTURES ON AND ADJACENT TO THE SITE. UNDERGROUND LOCATES (INCLUDING ONTARIO ONE CALL: 1–800–400–2255) SHALL BE CONDUCTED PRIOR TO THE COMMENCEMENT OF ANY EXCAVATION. CONFIRM LOCATIONS OF BURIED SERVICES AND UTILITIES BY CAREFUL TEST EXCAVATIONS AND REPORT ANY DIFFERENCES TO THE ENGINEER.
C. EXISTING GRADE ELEVATIONS INDICATED ON THE DRAWINGS ARE FOR GUIDANCE ONLY. COMPLETENESS AND ACCURACY ARE NOT GUARANTEED. CONFIRM EXISTING GRADE ELEVATIONS AND REPORT ANY DIFFERENCES TO THE ENGINEER.
D. COORDINATE AND SCHEDULE WORK WITH THE AUTHORITIES AND OTHER TRADES.
E. SCHEDULE WORK TO PROVIDE THE MINIMUM DISRUPTION TO SERVICES.
5.2 MAINTAIN AND PROTECT FROM DAMAGE, SERVICES, UTILITIES AND STRUCTURES ENCOUNTERED.
5.3 PROTECT EXISTING BUILDINGS, TREES AND OTHER PLANTS, LAWNS, FENCING, SERVICE POLES, WIRES, PAVEMENT, SURVEY BENCH MARKS AND MONUMENTS AND OTHER SURFACE FEATURES FROM DAMAGE WHILE WORK IS IN PROGRESS. DO NOT DISTURB SOIL WITHIN BRANCH SPREAD OF TREES OR SHRUBS THAT ARE TO REMAIN.
5.4 PROVIDE TRAFFIC CONTROL AND SAFETY MEASURES INCLUDING ANY NECESSARY PERSONNEL AND THE SUPPLY, INSTALLATION, REMOVAL AND REPLACEMENT OF ALL NECESSARY SIGNAGE AND BARRIERS, AS REQUIRED BY THE AUTHORITIES. IF APPLICABLE, PROVIDE TRAFFIC MANAGEMENT PLAN AS PER CITY OF OTTAWA REQUIREMENTS.
5.5 REMOVE OBSTRUCTIONS, ICE AND SNOW, FROM SURFACES TO BE EXCAVATED.
5.6 CUT PAVEMENT AND / OR SIDEWALK NEATLY ALONG LIMITS OF PROPOSED EXCAVATION IN ORDER THAT SURFACE MAY BREAK EVENLY AND CLEANLY.
5.7 COORDINATE AND PAY FOR GEOTECHNICAL INSPECTIONS AND COMPACTION TESTS OF SUB–GRADE, PIPE BEDDING AND EACH LAYER OF SURROUND MATERIAL, BACKFILL, SUB–BASE, BASE AND ASPHALT TO THE SATISFACTION OF THE GEOTECHNICAL CONSULTANT AND ENGINEER. SUBMIT GEOTECHNICAL INSPECTIONS AND COMPACTION REPORTS TO ENGINEER.
5.8 PRIOR TO COMMENCEMENT OF TOPSOIL STRIPPING REMOVE FROM SITE ALL EXPOSED BOULDERS, DEBRIS AND LIVE AND DEAD PLANT MATERIAL (EXCEPT TREES AND OTHER VEGETATION TO REMAIN). STRIP TOPSOIL FROM THE ENTIRE SITE. STOCKPILE TOPSOIL ON SITE AS DIRECTED BY CONSULTANT. DO NOT MIX TOPSOIL WITH SUBSOIL. CUT AND FILL AS NECESSARY TO ACHIEVE THE REQUIRED SUB–GRADE ELEVATION. DISPOSE OF SURPLUS AND UNSUITABLE EXCAVATED MATERIAL OFF SITE. FILL MATERIAL AND THE PLACEMENT AND COMPACTION OF THE FILL MATERIAL AS PER THE GEOTECHNICAL REPORT AND TO THE SATISFACTION OF THE GEOTECHNICAL CONSULTANT. STOCKPILE GRANULAR AND FILL MATERIALS IN MANNER TO PREVENT SEGREGATION AND PROTECT FROM CONTAMINATION.

5.9 EXCAVATION, TRENCHING & BACKFILL:
A. SHORE AND BRACE EXCAVATIONS, PROTECT SLOPES AND BANKS AND PERFORM ALL WORK IN ACCORDANCE WITH ONTARIO REGULATION 213/91 UNDER THE ONTARIO OCCUPATIONAL HEALTH AND SAFETY ACT AND OTHER AUTHORITIES HAVING JURISDICTION.
B. KEEP EXCAVATIONS FREE OF WATER WHILE WORK IS IN PROGRESS. PROTECT OPEN EXCAVATIONS AGAINST FLOODING AND DAMAGE DUE TO SURFACE RUN–OFF.
C. EXCAVATION MUST NOT INTERFERE WITH BEARING CAPACITY OF ADJACENT FOUNDATIONS.
D. DO NOT OBSTRUCT FLOW OF SURFACE DRAINAGE OR NATURAL WATERCOURSES.
E. EXCAVATE TO LINES, GRADES, ELEVATIONS AND DIMENSIONS AS INDICATED.
F. EARTH BOTTOMS OF EXCAVATIONS TO BE UNDISTURBED SOIL, LEVEL, FREE FROM LOOSE, SOFT OR ORGANIC MATTER.
G. ALL STRUCTURES WITHIN PAVED AREAS SHALL HAVE 4:1 FROST TAPERS FROM FROST LINE TO SUB–GRADE.
H. CORRECT OVER–EXCAVATION WITH GRANULAR A COMPACTED TO NOT LESS THAN 95% OF CORRECTED MAXIMUM DRY DENSITY.
I. SUB–GRADE AND AREAS TO BE BACKFILLED TO BE FREE FROM DEBRIS, SNOW, ICE, WATER AND FROZEN GROUND.
J. DO NOT USE BACKFILL MATERIAL WHICH IS FROZEN OR CONTAINS ICE, SNOW OR DEBRIS.
K. BEDDING AND SURROUND MATERIAL FOR SEWERS SHALL BE OPSS GRANULAR A. BEDDING AND SURROUND MATERIAL FOR WATERMAIN AND WATER SERVICE CONNECTIONS SHALL BE OPSS GRANULAR A OR OPSS GRANULAR M. RE–CYLCLED GRANULAR MATERIALS ARE NOT PERMITTED.
L. DO NOT USE BEDDING, SURROUND OR BACKFILL MATERIAL WHICH IS FROZEN OR CONTAINS ICE, SNOW OR DEBRIS.
M. PIPE BEDDING SHALL BE 150mm THICK. SHAPE BED TRUE TO GRADE AND TO PROVIDE CONTINUOUS, UNIFORM BEARING SURFACE FOR PIPE.
N. PLACE SURROUND MATERIAL AROUND PIPES TO FULL WIDTH OF TRENCH AND TO 300mm ABOVE PIPES.
O. PLACE BEDDING AND SURROUND MATERIAL IN UNIFORM LAYERS NOT EXCEEDING 150mm COMPACTED THICKNESS. PLACE FILL AND BACKFILL MATERIAL IN UNIFORM LAYERS NOT EXCEEDING 300mm COMPACTED THICKNESS.
P. COMPACT EACH LAYER TO 95% OF CORRECTED DRY DENSITY BEFORE PLACING SUCCEEDING LAYER.
Q. DO NOT BACKFILL AROUND OR OVER CAST–IN–PLACE CONCRETE WITHIN 24 HOURS AFTER PLACING OF CONCRETE.
R BACKFILL MATERIALS WITHIN 1.8m OF PROPOSED GRADE SHALL MATCH THE MATERIALS EXPOSED ON THE TRENCH WALLS. BACKFILL BELOW 1.8m OF THE PROPOSED CAN CONSIST OF EITHER ACCEPTABLE NATIVE MATERIAL; ROCK; OR IMPORTED GRANULAR MATERIAL CONFORMING TO OPSS GRANULAR B TYPE I OR II. ANY ORGANIC SOILS OR TOPSOIL, IF ENCOUNTERED, SHALL BE REMOVED FROM THE EXCAVATION. IF ROCK IS USED AS BACKFILL IT SHALL BE WELL SHATTERED AND GRADED AND 200mm OR SMALLER IN DIAMETER. TO PREVENT INGRESS OF FINE MATERIAL INTO VOIDS IN THE ROCK FILL, THE UPPER SURFACE OF THE ROCK FILL SHALL BE COVERED WITH 150mm LAYER OF COMPACTED, WELL GRADED CRUSHED STONE PLACED ON GEOTEXTILE FABRIC.
5.10 PIPES:
A. HANDLE PIPE USING METHODS APPROVED BY MANUFACTURER.
B. LAY, CUT AND JOIN PIPES IN ACCORDANCE WITH MANUFACTURER'S RECOMMENDATIONS.
C. USE ONLY FITTINGS AS RECOMMENDED BY PIPE MANUFACTURER.
D. LAY PIPES ON PREPARED BED, TRUE TO LINE AND GRADE AND ENSURE BARREL OF EACH PIPE IS IN CONTACT WITH SHAPED BED THROUGHOUT ITS FULL LENGTH, FREE OF SAGS OR HIGH POINTS.
E. DO NOT EXCEED MAXIMUM JOINT DEFLECTION RECOMMENDED BY PIPE MANUFACTURER.
F. WHENEVER WORK IS SUSPENDED, INSTALL REMOVABLE WATERTIGHT BULKHEAD AT OPEN END OF LAST PIPE LAID TO PREVENT ENTRY OF FOREIGN MATERIALS.
G. WHEN STOPPAGE OF WORK OCCURS, BLOCK PIPES TO PREVENT CREEP DURING DOWN TIME. MAKE WATERTIGHT CONNECTIONS TO MANHOLES.
H. JOINTS SHALL BE STRUCTURALLY SOUND AND WATERTIGHT.
I. REPAIR OR REPLACE PIPE, PIPE JOINT OR BEDDING FOUND DEFECTIVE.
5.11 SEWERS:
A. CONSTRUCT SEWER TRENCHES AS PER CITY DWG S6 & S7.
B. RIGID STRUCTURES, INSTALL PIPE JOINTS NOT MORE THAN 1.2m FROM SIDE OF STRUCTURE.
C. MAINTAIN EXISTING SEWAGE FLOWS DURING CONSTRUCTION.
D. PERFORM FIELD TESTS FOR QUALITY CONTROL OF ALL SANITARY SEWERS. SPECIFICALLY, THE LEAKAGE TESTING SHALL BE COMPLETED IN ACCORDANCE WITH OPSS 410. REPAIR AND RETEST SEWER LINE AS REQUIRED. REPAIR VISIBLE LEAKS REGARDLESS OF TEST RESULTS.
E. CONDUCT TWO CCTV INSPECTIONS OF SEWERS. FIRST INSPECTION AFTER COMPLETION OF CONSTRUCTION. SECOND INSPECTION IMMEDIATELY PRIOR TO END OF WARRANTY PERIOD. A PAN AND TILT CAMERA SHALL BE USED. REPAIR SEWER LINE AS REQUIRED. SUBMIT REPORTS AND DVDS TO ENGINEER.
5.12 MANHOLES, CATCH BASINS & DITCH INLETS:
A. JOINTS: SHALL BE MADE WATERTIGHT.
B. SET PRECAST CONCRETE BASE ON 150mm MINIMUM OF GRANULAR BEDDING COMPACTED TO 100% CORRECTED MAXIMUM DRY DENSITY.
C. MAKE EACH JOINT WATERTIGHT WITH RUBBER RING GASKETS.
D. PLACE GRANULAR BACKFILL MATERIALS IN A UNIFORM LAYERS TO COMPACTED THICKNESS OF 150mm, COMPACT TO 95% CORRECTED MAXIMUM DRY DENSITY.
E. PLACE FRAME AND COVER ON TOP SECTION TO ELEVATION AS INDICATED. IF ADJUSTMENT REQUIRED USE CONCRETE RINGS TO A MAXIMUM OF 300mm.
F. CLEAN UNITS OF DEBRIS, FOREIGN AND SURPLUS MATERIALS. REMOVE FINS AND SHARP PROJECTIONS. PREVENT DEBRIS FROM ENTERING SYSTEM.
5.13 MAINTAIN RECORD DRAWINGS AND RECORD ACCURATELY DEVIATIONS FROM THE ORIGINAL CONTRACT DOCUMENTS CAUSED BY SITE CONDITIONS AND CHANGES MADE BY CHANGE ORDER OR ADDITIONAL INSTRUCTIONS. UPDATE DAILY AND MAKE AVAILABLE ON–SITE FOR REVIEW THROUGHOUT THE CONSTRUCTION PERIOD. MARK CHANGES IN RED INK. RECORD DRAWINGS SHALL INCLUDE BUT NOT NECESSARILY LIMITED TO CHANGES OF DIMENSION AND DETAIL; CHANGES TO GRADE ELEVATIONS; AND HORIZONTAL AND VERTICAL LOCATIONS OF UNDERGROUND SERVICES, UTILITIES AND APPURTENANCES REFERENCED TO A PERMANENT SURFACE STRUCTURE.
5.14 CONCRETE CURBS TO CITY OF OTTAWA DRAWING No. SC1.1.
5.15 REINSTATE PAVEMENTS AND SIDEWALKS DISTURBED BY EXCAVATION TO THICKNESS, STRUCTURE AND ELEVATION WHICH EXISTED BEFORE EXCAVATION.
5.16 CLEAN AND REINSTATE AREAS AFFECTED BY THE WORK.

6. PAVEMENT

6.1 LIGHT DUTY PAVEMENT STRUCTURE:
50mm SUPERPAVE 12.5 ASPHALTIC CONCRETE
150mm OPSS GRANULAR A BASE
300mm OPSS GRANULAR B TYPE II SUB–BASE

LIGHT DUTY PAVEMENT STRUCTURE:
40mm SUPERPAVE 12.5 ASPHALTIC CONCRETE
50mm SUPERPAVE 19.0 ASPHALTIC CONCRETE
150mm OPSS GRANULAR A BASE
450MM OPSS GRANULAR B TYPE II SUB–BASE

MODIFIED EXISTING PAVEMENT:
REMOVE EXISTING ASPHALT
ADD OPSS GRANULAR A MATERIAL AS REQUIRED TO ACHIEVE THE PROPOSED GRADE ELEVATIONS
PAVE WITH 50mm HL–3 OR SUPERPAVE 12.5 ASPHALTIC CONCRETE

6.2 RE–CYLCLED GRANULAR MATERIALS ARE NOT PERMITTED. ASPHALTIC CONCRETE SHALL BE PERFORMANCE GRADE PG58–34. HOT MIX ASPHALT MATERIALS SHALL BE ACCORDING TO OPSS 1150 OR 1151. PAVEMENT SUB–GRADE PREPARATION AND CONSTRUCTION OF THE PAVEMENT STRUCTURE SHALL CONFORM TO THE GEOTECHNICAL INVESTIGATION TO THE SATISFACTION OF THE GEOTECHNICAL ENGINEER.
6.3 ALL EXISTING ASPHALT REMOVED SHALL BE HAUL TO A FACILITY APPROVED FOR ACCEPTING SUCH MATERIALS. REMOVE ALL MATERIALS TO THE SUB–GRADE LEVEL. REMOVE ORGANIC OR UNSUITABLE MATERIAL FROM SUB–GRADE WHERE ENCOUNTERED TO THE SATISFACTION OF THE GEOTECHNICAL ENGINEER. SUB–GRADE TO BE FREE FROM DEBRIS, SNOW, ICE, WATER AND FROZEN GROUND. COMPACT SUB–GRADE TO 95%.
6.4 CONSTRUCT GRANULAR BASE AND SUB–BASE TO DEPTH AND GRADE IN AREAS INDICATED.CONSTRUCT A 5H:1V FROST TAPER IN SUB–GRADE SURFACE AS A TRANSITION BETWEEN DIFFERING PAVEMENT STRUCTURES AND BETWEEN PAVEMENT AND CURBS AND SIDEWALKS.
6.5 ENSURE NO FROZEN MATERIAL IS PLACED. PLACE MATERIAL ONLY ON CLEAN UNFROZEN SURFACE, FREE FROM SNOW OR ICE.
6.6 PLACE MATERIAL TO FULL WIDTH IN UNIFORM LAYERS NOT EXCEEDING 300mm COMPACTED THICKNESS. SHAPE EACH LAYER TO SMOOTH CONTOUR AND COMPACT TO SPECIFIED DENSITY BEFORE SUCCEEDING LAYER IS PLACED.
6.7 COMPACT SUB–BASE MATERIAL TO DENSITY OF NOT LESS THAN 98% CORRECTED MAXIMUM DRY DENSITY. FILL OVER–EXCAVATED SUB–GRADE WITH SUB–BASE MATERIAL, COMPACT TO 98%. COMPACT BASE MATERIAL TO DENSITY NOT LESS THAN 100% CORRECTED MAXIMUM DRY DENSITY.
6.8 IN AREAS NOT ACCESSIBLE TO ROLLING EQUIPMENT, COMPACT TO SPECIFIED DENSITY WITH MECHANICAL TAMPERS.
6.9 REPLACE PAVEMENT DISTURBED BY CONSTRUCTION AND REPLACE WITH PAVEMENT STRUCTURE ABOVE.
6.10 WHERE NEW ASPHALT COMES IN CONTACT WITH EXISTING PAVEMENT: SAWCUT EXISTING ASPHALT LAYER TO CREATE A CLEAN STRAIGHT EDGE AND CONSTRUCT AS PER DETAIL. TACK COAT SHALL BE APPLIED TO ASPHALT SURFACES AT WHICH JOINTS ARE TO BE MADE INCLUDING EXISTING PAVEMENT SURFACES THAT HAVE BEEN CUT, GROUND OR MILLED. TACK COAT THE SURFACE OF ALL BINDER COURSES AND BUTTING CONCRETE SURFACES. SURFACES TO BE TACK COATED SHALL BE FREE OF STANDING WATER AND CONTAMINATION, SUCH AS MUD, LOOSE AGGREGATE OR DEBRIS AND SHALL BE DRY AND CLEAN WHEN THE TACK COAT IS APPLIED. TACK COAT SHALL BE PLACED SUFFICIENTLY AHEAD OF THE PAVING OPERATION TO ALLOW FOR CURING. PAVING AND CONSTRUCTION EQUIPMENT SHALL NOT BE PERMITTED ONTO THE TACK COAT UNTIL IT HAS SET. TACK COAT MATERIAL SHALL CONSIST OF SS–1 EMULSIFIED ASPHALT DILUTED WITH AN EQUAL VOLUME OF WATER. THE UNDILUTED MATERIAL SHALL BE ACCORDING TO OPSS 1103.
6.11 SHAPE BASE TO SMOOTH CONTOUR AND COMPACT TO NOT LESS THAN 100% CORRECTED MAXIMUM DRY DENSITY BEFORE BEGINNING PAVING OPERATIONS.
6.12 APPLY ASPHALTIC CONCRETE ONLY WHEN BASE OR PREVIOUS COURSE IS DRY AND AIR TEMPERATURE IS ABOVE 5 DEG.C
6.13 ROLL UNTIL ROLLER MARKS ARE ELIMINATED AND COMPACTED TO NOT LESS THAN 95% OF DENSITY. COMPACT WITH HOT TAMPERS IN AREAS INACCESSIBLE TO A ROLLER. BEVEL EDGES ADJACENT TO GRANULAR SURFACES.
6.14 FINISH SURFACE SMOOTH, TRUE TO GRADE.
6.15 KEEP VEHICULAR TRAFFIC AND OTHER LOADS OFF NEWLY PAVED AREAS UNTIL 24 HOURS AFTER PAVING.
6.16 DIVERT UNUSED AND WASTE ASPHALT TO A FACILITY APPROVED FOR ACCEPTING SUCH MATERIALS.
6.17 APPLY TRAFFIC PAINT AS IDENTIFIED ON PLAN. TRAFFIC PAINT: NON–DARKENING, HOMOGENEOUS, UNIFORM AND SMOOTH, FREE FROM SKIN, DIRT AND OTHER FOREIGN PARTICLES. APPLY TO DRY PAVEMENT SURFACE FREE FROM FROST, ICE, DUST, OIL, GREASE AND OTHER FOREIGN MATERIALS. PROTECT PAVEMENT MARKINGS UNTIL DRY.

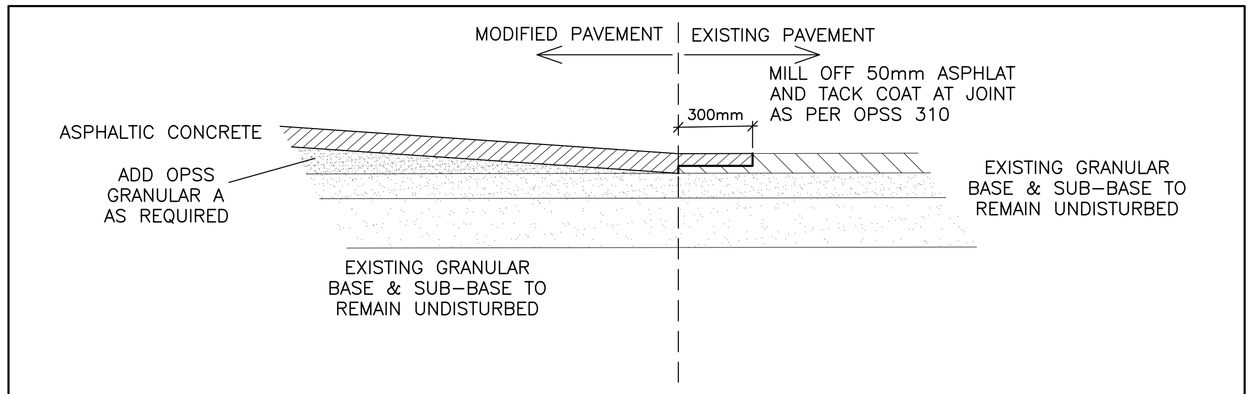

PAVEMENT TRANSITION
N.T.S.

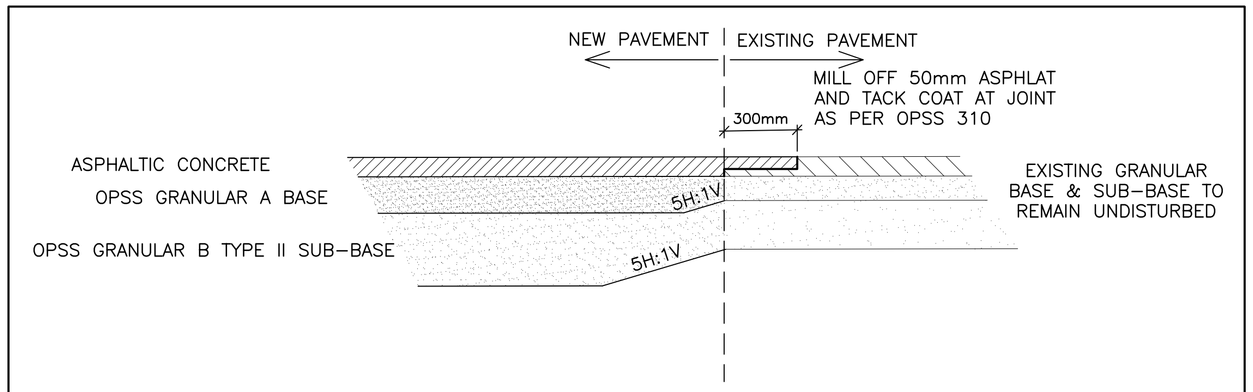

PAVEMENT TRANSITION
N.T.S.

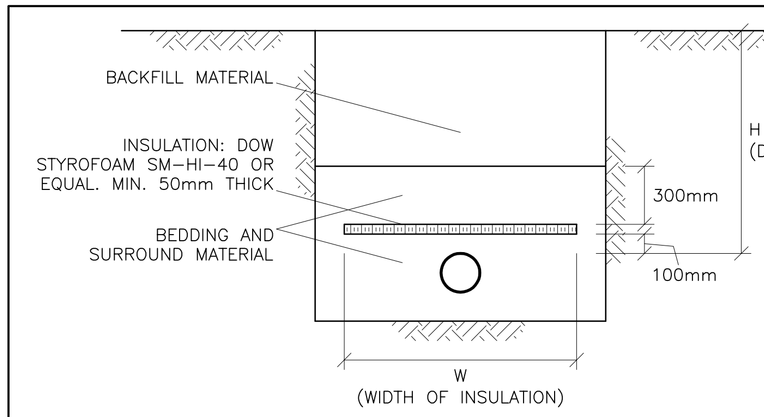

H (DEPTH OF COVER)	INSULATION THICKNESS	W (WIDTH OF INSULATION)
1400 TO 2000mm	50mm	1200mm + DIAMETER OF PIPE
1100 TO 1400mm	75mm	1800mm + DIAMETER OF PIPE
LESS THAN 1100mm	100mm	2400mm + DIAMETER OF PIPE

INSULATE SEWER AS INDICATED AND WHERE DEPTH OF COVER IS LESS THAN 2000mm.
CENTER INSULATION OVER PIPE.
JOINTS BETWEEN SHEETS OF INSULATION SHALL BE STAGGERED.

INSULATION OF SEWERS
IN SHALLOW TRENCHES
N.T.S.

CATCH BASIN & MANHOLE SCHEDULE

REF	TOP	SIZE	TYPE	INVERT AT INLET	INVERT AT OUTLET	NOTES
STORM SEWER						
CB/MH–4	83.02	1200mm	PRE–CAST CONCRETE CATCH–BASIN/ MANHOLE	82.01(W)	82.01(E)	TO OPSD 701.010 & CITY OF OTTAWA STANDARDS – FRAMES & COVERS CITY DWG No. S25 & S28.1 OR OPSD 401.010
DI–5	82.91	600 x 600mm	PRE–CAST CONCRETE DITCH INLET	–	82.11	TO OPSD 705.030 & CITY OF OTTAWA STANDARDS – GRATE TO OPSD 403.010 3:1 SLOPE
MH–6	±83.02	SOLENO AS–2	OIL & GRIT SEPARATOR HDPE MANHOLE	81.13(N)	81.13(S)	–

KEY PLAN

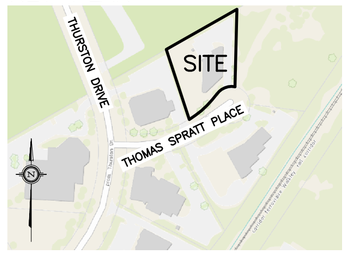

No.	DATE	REVISION
3	NOV 27–19	OGS MH ADDED RE–ISSUED FOR APPROVAL
2	AUG 30–19	ISSUED FOR APPROVAL
1	JUN 14–19	ISSUED FOR REVIEW AND COORDINATION

D. B. GRAY ENGINEERING INC.
Stormwater Management - Grading & Drainage - Storm & Sanitary Sewers - Watermains
700 Long Point Circle 613-425-8044
Ottawa, Ontario d.gray@dbrayengineering.com

Project
WAREHOUSE / OFFICE ADDITION
1009–1011 THOMAS SPRATT PLACE
OTTAWA, ONTARIO

Drawing Title
NOTES & DETAILS

Engineer's Seal
LICENSED PROFESSIONAL ENGINEER
D.B. GRAY
17016502
NOV 27–19
PROVINCE OF ONTARIO
NOT VALID UNLESS SIGNED & DATED

Drawn	D.B.G.
Hor. Scale	
Vert. Scale	
Date	JUN 14–19
Job No.	19035

Drawing No.
C–3
of 4